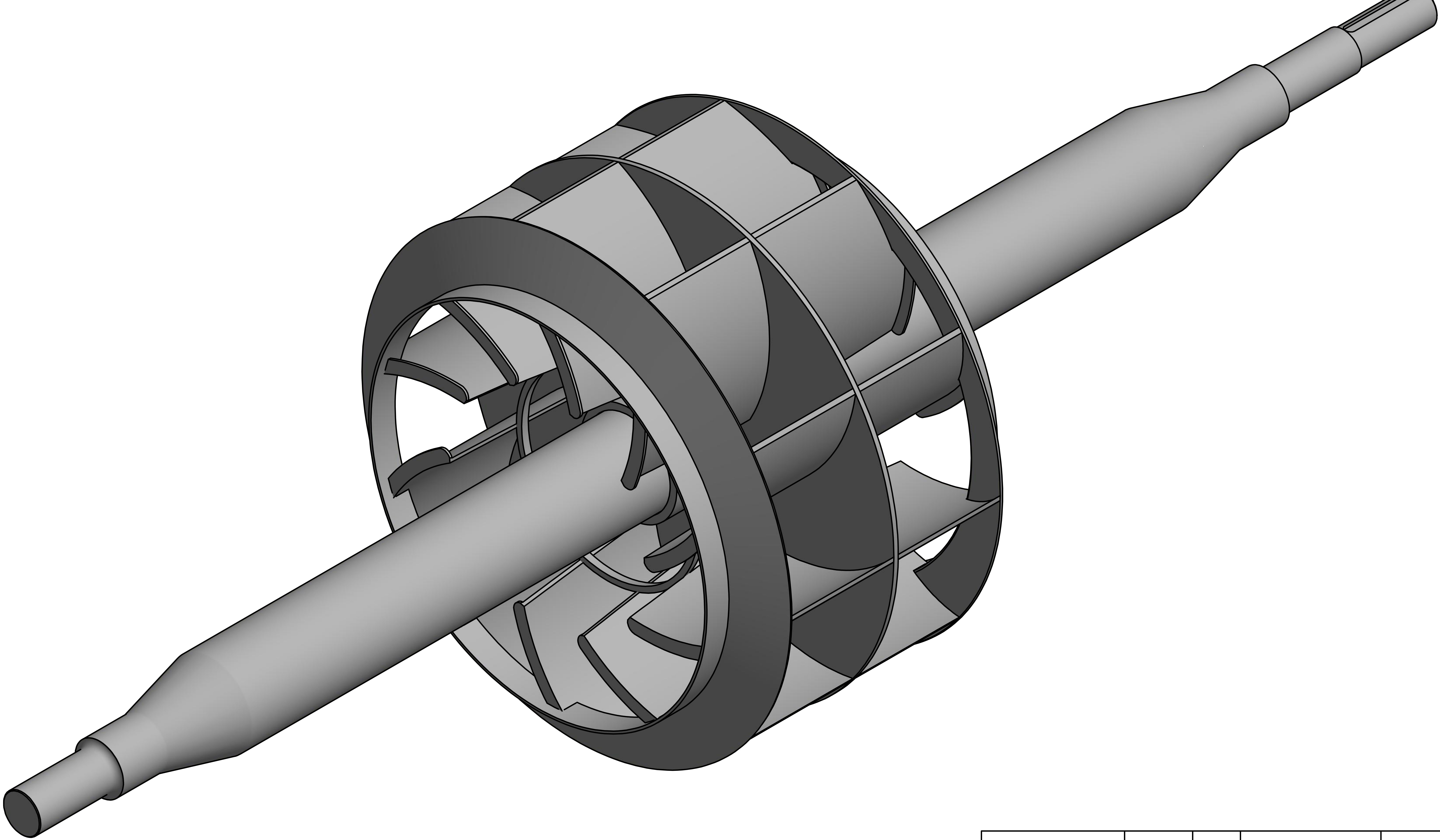

	Date	Name
Drawn	11/24/2014	Vanik Vartan
Checked		
Standard		

1

A2

State	Changes	Date	Name